Solitron DEVICES, INC.

POSITIVE REGULATOR, FIXED

SDP7812A JAA
SDP7812A JAB
SDP7812A JDA

FEATURES

- RUGGED PACKAGE
- HI-REL CONSTRUCTION
- CERAMIC EYELETS: JAA, JAB
- LEAD BENDING OPTIONS
- COPPER CORED 52 ALLOY PINS
- LOW IR LOSSES
- LOW THERMAL RESISTANCE
- OPTIONAL MIL-STD-883 SCREENING

ABSOLUTE MAXIMUM RATINGS

PARAMETER	SYMBOL		UNITS
TOTAL POWER DISSIPATION	PD	30	W
INPUT TO OUTPUT VOLTAGE DIFFERENTIAL (VO=GND)		35	V
OPERATING JUNCTION TEMPERATURE	TJ	-55 TO +175	°C
STORAGE TEMPERATURE	stg	-65 TO +150	°C
MAXIMUM LEAD TEMPERATURE	TL	300	°C
THERMAL RESISTANCE	RthJc	3.0	°C/W

SCHEMATIC

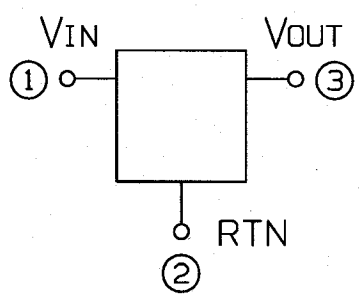

ELECTRICAL CHARACTERISTICS (NOTE 1)

PARAMETER	SYMBOL	TEST CONDITIONS (1)	MIN.	TYP.	MAX.	UNITS
OUTPUT VOLTAGE	VO	TJ=25°C	11.8	12.0	12.2	V
LINE REGULATION (1)	$\frac{\Delta VOUT}{\Delta VIN}$	VIN=14.5V to 30V, TJ=25°C VIN=16V to 22V, TJ=25°C	–	12 6	120 60	mV mV
LOAD REGULATION (1)	$\frac{\Delta VOUT}{\Delta IOUT}$	Io=5mA to 1.5A, TJ=25°C Io=250mA to 750mA, TJ=25°C	–	28 10	80 40	mV mV
TOTAL OUTPUT VOLTAGE TOLERANCE	VOT	VIN=15.5V to 27V Io=5mA to 1.0A, P≤20W	11.7	12.0	12.3	V
QUIESCENT CURRENT	IQ	OVER TEMPERATURE RANGE	-	-	7	mA
		TJ=25°C	-	4	6	mA
QUIESCENT CURRENT CHANGE	IADJ	WITH LINE: VIN=15V to 30V	-	-	0.8	mA
		WITH LOAD: Io=5mA to 1.0A	-	-	0.5	mA
DROPOUT VOLTAGE		ΔVo=100mV, TJ=25°C Io=1.0A	- -	- 2	- 2.5	V
PEAK OUTPUT CURRENT	IOPK	TJ=25°C	1.5	2.0	3.3	A
SHORT CIRCUIT CURRENT		VIN=35V, TJ=25°C	–	–	1.2	A
RIPPLE REJECTION	RREJ	ΔVIN=10V, f=120Hz, TJ=25°C	61	–	–	dB
OUTPUT NOISE VOLTAGE (RMS)	en	f=10Hz to 100KHz (NOTE 3)	–	–	40	μV/V
LONG TERM STABILITY	$\frac{\Delta VOUT}{\Delta TIME}$	1000hrs. at TJ=125°C	–	48	–	mV
THERMAL SHUTDOWN		Io=5mA	–	175	–	°C

REV. 10/93

NOTES:

1) ALL REGULATION TESTS ARE MEASURED AT CONSTANT JUNCTION TEMPERATURE USING PULSE TESTING WITH A LOW DUTY CYCLE.

2) UNLESS OTHERWISE SPECIFIED, THESE SPECIFICATIONS APPLY FOR VIN-VOUT=19V, Io=500mA, CIN=0.33μF, COUT=0.1μF.

3) THIS TEST IS GUARANTEED BUT IS NOT TESTED IN PRODUCTION.

STANDARD BEND CONFIGURATIONS — JAA JDA

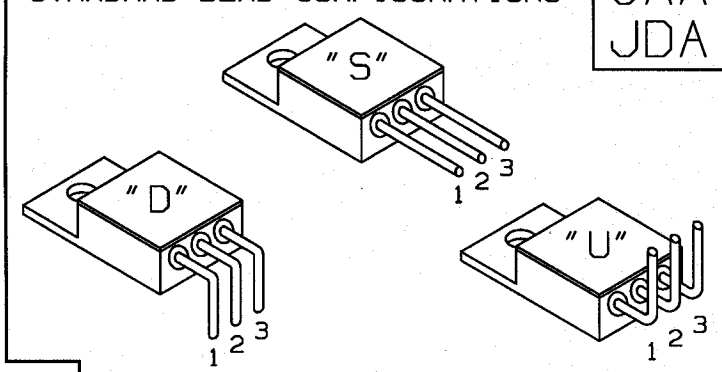

(CUSTOM BEND OPTIONS AVAILABLE)

JAB — STANDARD BEND CONFIGURATIONS

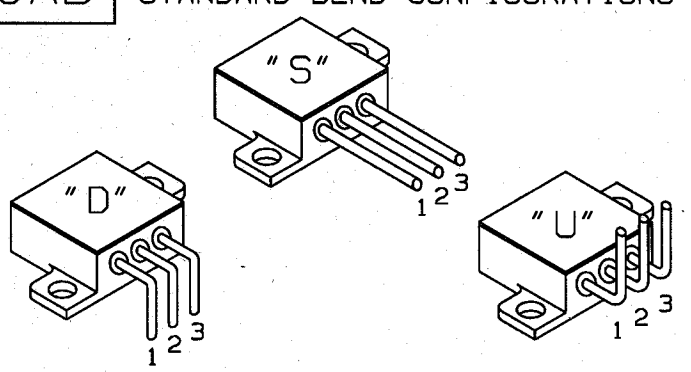

(CUSTOM BEND OPTIONS AVAILABLE)