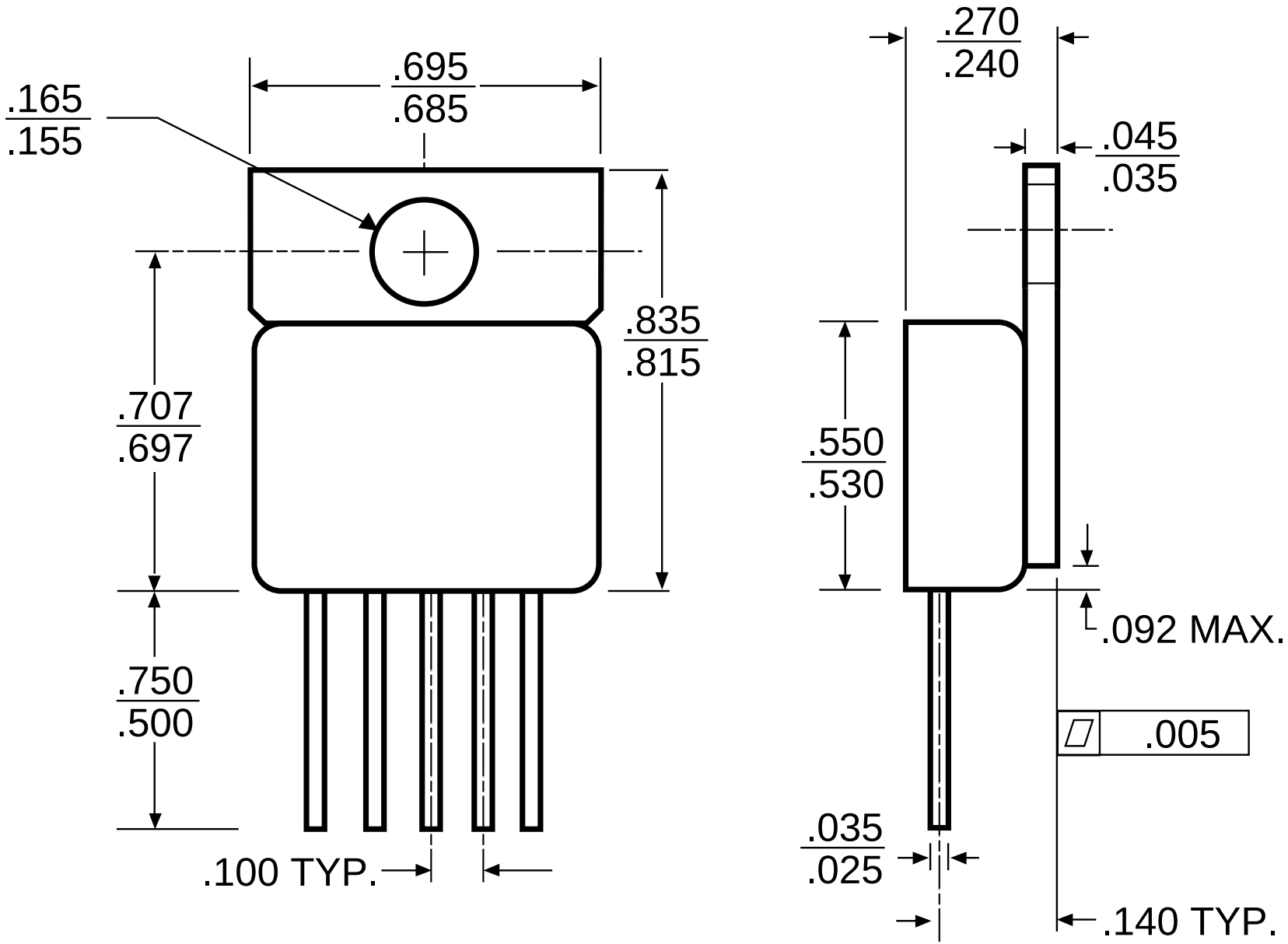MECHANICAL OUTLINE