TO-257AA Package Outline

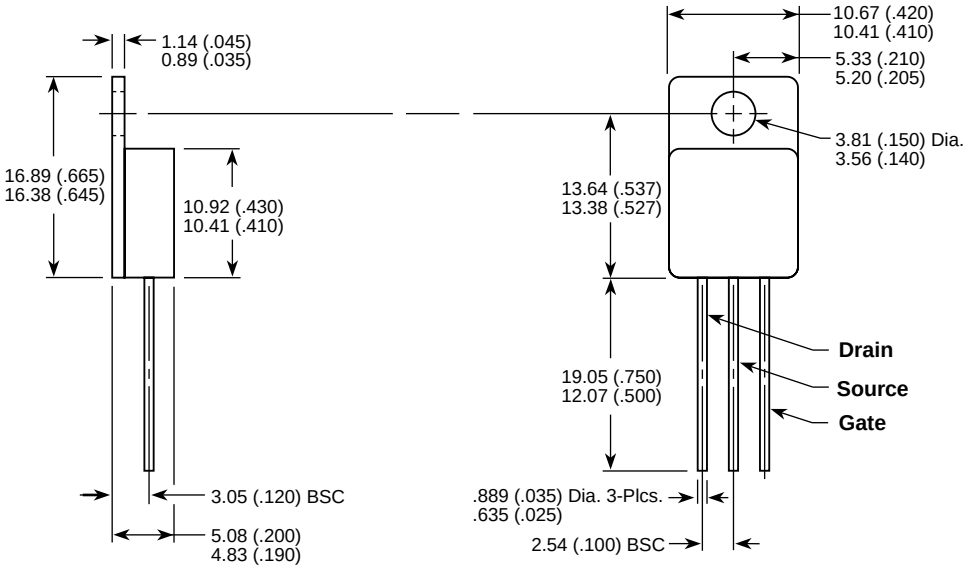

Dimensions in Millimeters and (Inches)