MECHANICAL OUTLINE

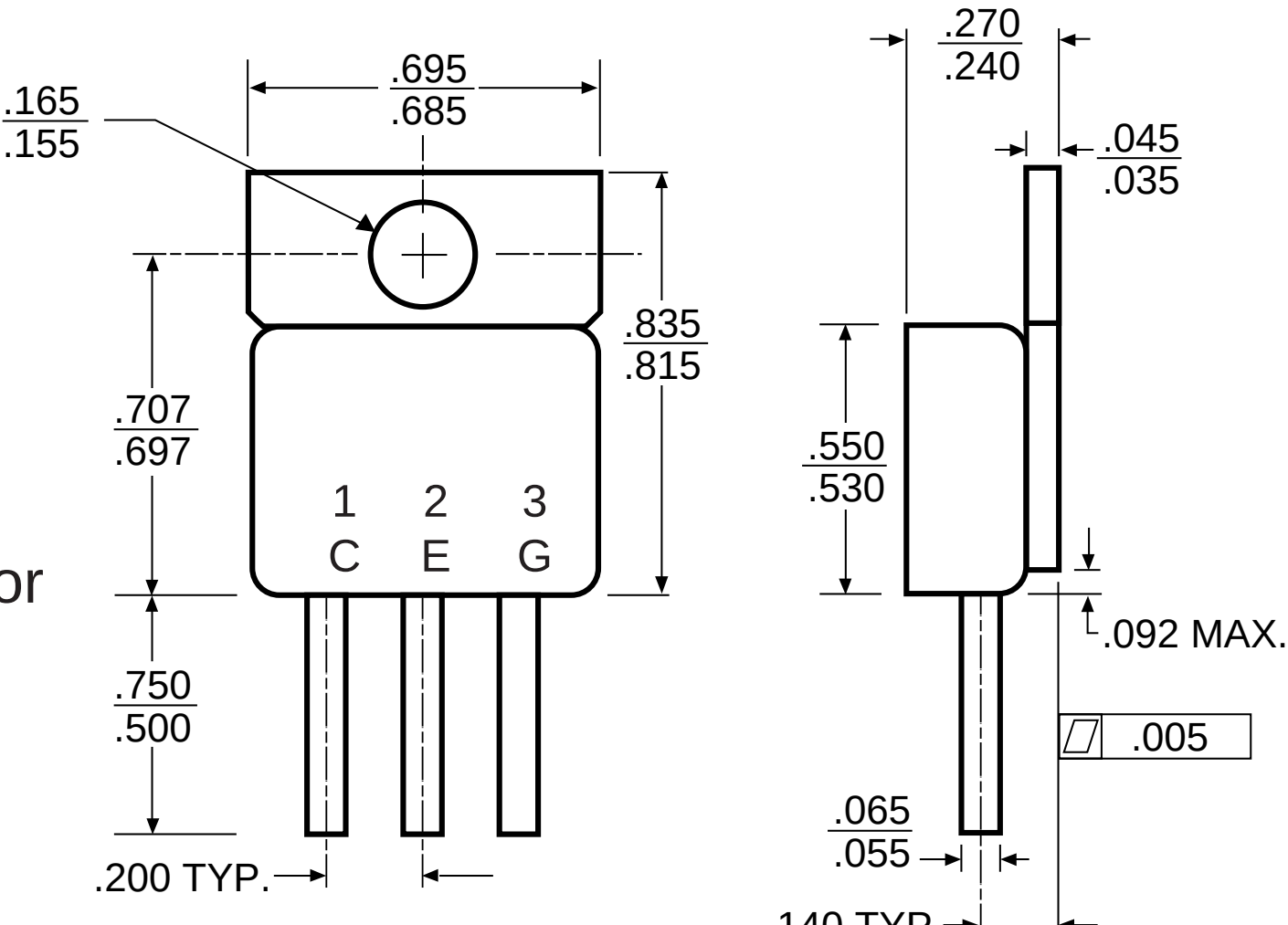

or