11

STANDARD LEADS

JED
TO-259
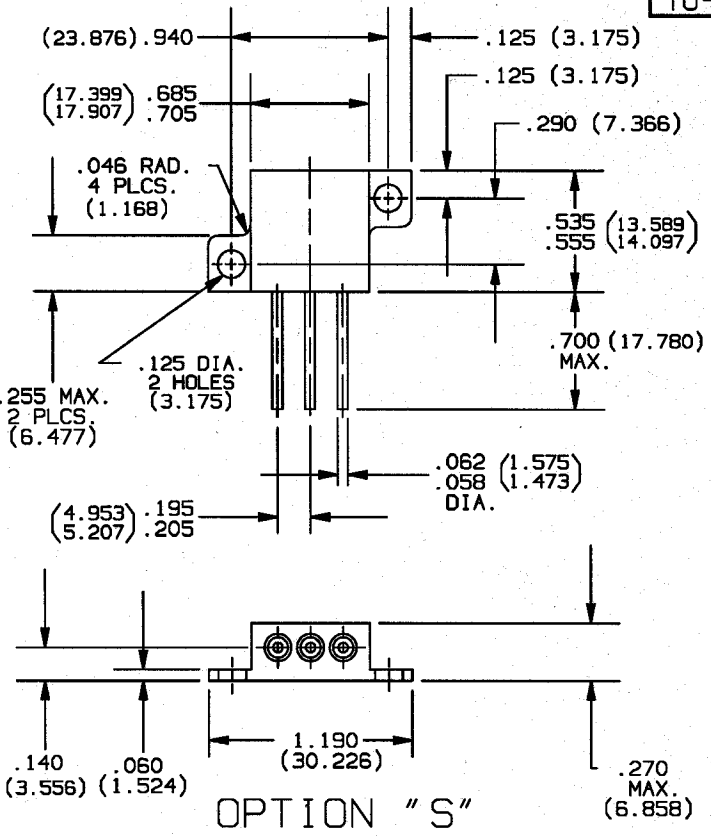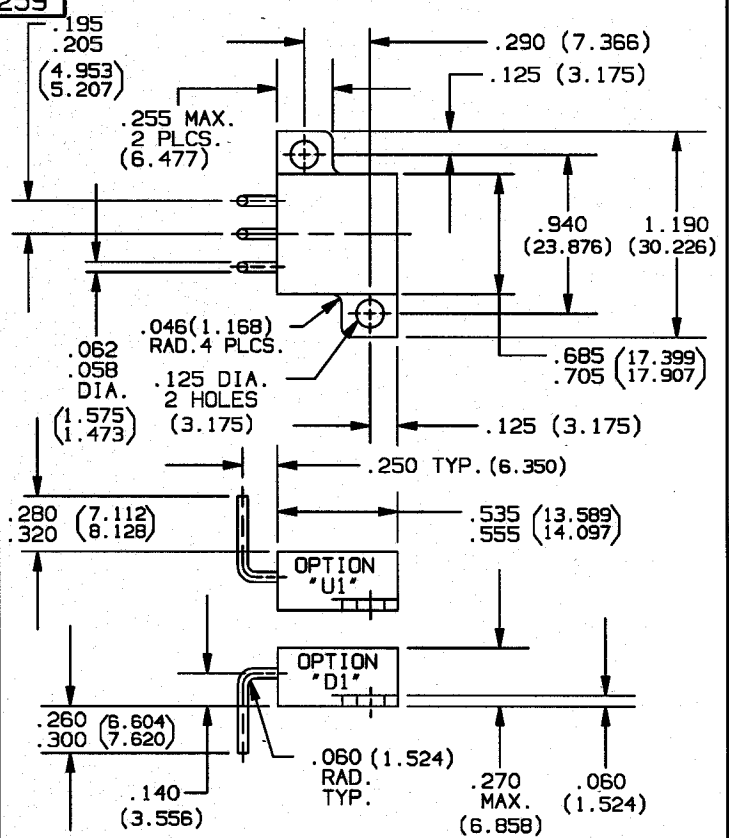
LEAD BEND OPTIONS